CONTROLLED COPY	PRODUCT DATA SHEET	REFERENCE

Combination of 16A 3P IP67 Plug, Socket in Plastic Enclosure (ABS) with MCB Provision

ENCLOSURE DIMENSIONS

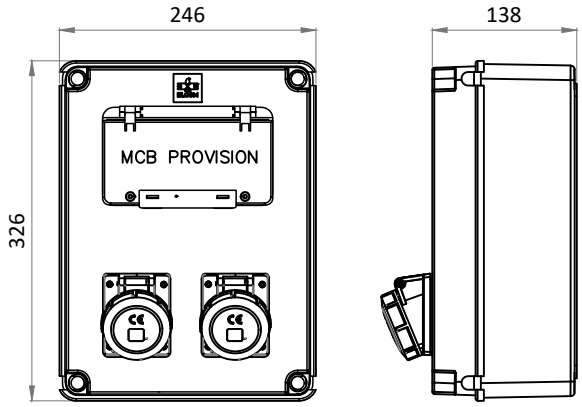

PRODUCT IMAGE

PLUG

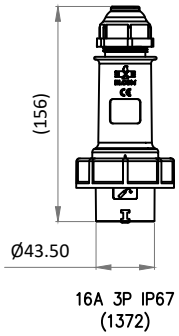

WIRING DIAGRAM

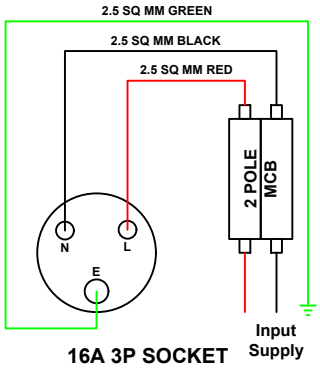

PRODUCT OVERVIEW

Plug Socket Features:

1) High impact & heat resistant polyamide material
2) Terminal with Double Screws, zinc plated
3) Glow wire Index: 850° C
4) Flame retardant material
5) Permissible temp. with / without load : -25°C to +90°C

Sr. No.	Description	Specification	Qty.
1	16A Plug	16A, 3P, IP67 Plug (1372)	2 Nos
2	16A Panel Mount (Angular) Socket	16A, 3P, IP67 Panel Mount (Angular) Socket (1376)	2 Nos
3	Wire Harness for 16A	2.5 Sq. mm. R, Bk, G Wire Harness	2 Nos
4	Plastic (ABS) Enclosure	246 X 326 X 138 mm, IP65, ABS	1 Nos

REV	IS	WAS	DATE	SIGN	APP
R1	2.5 Sq. mm. R, Bk, G Wire Harness	2.5 Sq. mm. R, Y, Bk Wire Harness	25.07.24	SRK	GJG

	BY	DATE	SIGN
APP	GJG	04.05.2024	
CHK	SRK	04.05.2024	
DRN	TRP	04.05.2024	

PRODUCT :- Combination of 16A 3P IP67 Plug, Socket in Plastic Enclosure (ABS) with MCB Provision

CODE : P2-1313762

ELCOM
Plot E-4, Kagal Five Star MIDC, Kagal, Kolhapur, MH - 416236, India
Elcom International Pvt. Ltd.
www.elcom-in.com

UNSP.TOLERANCE			
OVER	-	1	10
UP TO	1	10	-
±	0.3	0.5	1.0

DIMNS. IN mm | WT(Gm) Max. | SCALE:- NTS. | PROJECTION | SHEET 1 OF 1

DRAWING NUMBER: P2-1313762 | REVISION: R1

F:ENG-08.00

Copyright © 2024 by Elcom International Pvt.Ltd, India. All rights reserved

Note: Technical specifications are subject to change without prior notice
For Disposal of Product /Packing please refer note available on www.elcom-in.com